SECTION 19

FABRICATION

Look for this blue line in the left margin of the Design Manual documents. This line shows you where the latest update has been made.

GENERAL FABRICATION CONSIDERATIONS

Fabrication with **EXTREN®** structural shapes is similar to working with wood, aluminum and other comparable materials. Strongwell has available an extensive *Fabrication and Repair Manual* that can be provided upon request to fabricators and contractors unfamiliar with fiberglass fabrication. Some of the more common questions concerning fabrication with **EXTREN®** are:

Q. Do I need special tools?

A. The tools and methods are the same, but since fiberglass is very abrasive, standard bits and blades wear quickly and will need frequent resharpening or replacing.

Q. What types of blades and bits work best?

A. Carbide tip blades and bits are preferred. Diamond tipped or coated blades are best, allowing faster speeds and longer tool life.

Q. Can **EXTREN®** be punched and sheared?

A. Yes, but material thickness should be limited to 3/16” for punching and 1/4” maximum for shearing. Punches and shears work best if the blade is tapered to permit the cutting edge to penetrate a small amount of the material at any one time.

Q. Can **EXTREN®** products be formed or bent?

A. No, **EXTREN®** cannot be bent, rolled or pressed as can steel shapes and plates.

Q. Fabrication can be very dusty. Is the dust harmful?

A. Although the dust is non-toxic and presents no serious health hazard, it can cause skin irritation. The amount of irritation will vary from person to person and can be reduced or eliminated by use of a protective cream. A coverall or shop coat and gloves will add to the operator’s comfort.

Q. What other general fabrication practices should be observed?

A. Machine ways and other friction producing areas should be kept clean. Fiberglass chips are damaging abrasives.

Avoid excessive pressure when sawing, drilling, routing, etc. Too much force will rapidly dull tools and create excessive heat that can scorch the fiberglass.

Do not generate excessive heat in any machining operation. Excessive heat softens the bonding resin in the fiberglass resulting in a ragged rather than clean cut edge.

Support the fiberglass material rigidly during cutting operations. Shifting may cause chipping at the cut edges. Proper support will also prevent warping.

Always seal any cut surfaces or edges of the fiberglass shape with a compatible resin before reporting the job complete.

Fastenings and connections are an important part of both the fabrication and design process. See **CONNECTIONS** later in this section.

CONNECTIONS

INTRODUCTION

Connections of **EXTREN**® shapes and plates may be structural or non-structural. Structural joints — beams to beams, beams to columns, columns to floor, plate on grating (for composite action), etc. — must transmit design loads. Examples of non-structural joints might be coverplates of a foam cored insulating panel or a coverplate epoxied to fiberglass grating (for a walking surface).

Structural connections usually employ mechanical fasteners, adhesive bonding or a combination connection utilizing both. The strongest joint between pieces of **EXTREN**® shapes is obtained by using a combination of mechanical fasteners with adhesive applied to the mating surfaces.

Selection of the connection method is usually determined by:

- The required capacity of the joint
- Joint reliability
- The available space for the joint
- The types of members to be joined
- Suitability of joint for fabrication, especially high volume production work
- Service environment
- Need for disassembly
- Aesthetics desired

COMBINATION MECHANICAL AND ADHESIVE JOINTS

As was stated earlier, the best joints for most structural applications are combination joints. These joints offer the advantages of both types of connection. Adhesive bonding affords the joint good distribution of stresses, reduced effects of stress concentrations (at the holes) and increased joint stiffness while the mechanical fastening provides reliability, reduces the effect of peel and tension in eccentric joints and also provides the necessary clamping force to allow the curing of the epoxy. The table of allowable loads for clip angle at beam ends was developed using combination joints.

MECHANICAL CONNECTIONS

Mechanical connections utilize some type of mechanical fastener to join parts of fiberglass assemblies. Some of the more common types of mechanical fasteners are:

- Bolts with washer and nut (steel, stainless, monel, etc.)
- Threaded rod and nuts (steel and fiberglass **FIBREBOLT**®)
- Screws (self-tapping, and thread cutting)
- Rivets (blind rivets, drive rivets, solid rivets — available in many materials including steel, stainless, aluminum, nylon, etc.)
- Spring clips
- Nails
- Staples
- Threaded inserts with bolts
- Threaded holes with bolts

NOTE: Strongwell recommends the use of stainless steel fasteners to eliminate the corrosion problem associated with regular steel fasteners.

Although mechanical joints provide many advantages (such as conventional fabrication and assembly methods, ease of inspection, option of disassembly, etc.) the designer should be cautioned that improper spacing and edge distances of the bolts could cause a catastrophic failure by tear-out or shear-through. The American Society of Civil Engineers *Structural Plastics Design Manual* — Reference 2 recommends the edge distances (centerline of fastener to edge of material) and minimum pitch dimensions (center to center of fasteners in a line) – see table “Recommended Minimum Fastener Edge Distances And Pitch Ratio Of Distance To Fastener Diameter” shown in this section.

CONNECTIONS

ADHESIVE BONDED CONNECTIONS

A structural adhesive holds fiberglass parts together by surface attachment and can sustain a continuously applied load without excessive deformations or failure. In addition to sealing joints and surfaces, adhesives distribute the joint stresses more evenly.

Adhesive bonded joints work best when the adhesive layer is primarily stressed in shear or compression. Direct tensile or peel forces on adhesive joints should be avoided or evaluated with great care.

Successfully bonded adhesive joints of **EXTREN®** materials require careful fabrication procedures including:

1) Proper selection of the adhesive.

   The two types of adhesives recommended for use with **EXTREN®** fiberglass reinforced materials are polyesters and epoxies. Either adhesive will produce a satisfactory joint. However, polyester adhesives are somewhat less convenient to use because of the difficulty of measuring the small amount of catalyst required.

2) Proper preparation of the surfaces to be joined.

   The polyester surfacing veil must be removed to allow bonding of substrates.

   Contaminated surfaces must be thoroughly cleansed by wiping with a clean rag dampened with a solvent such as acetone, toluol or methyl alcohol. Wipe dry with a clean cloth. **Do not immerse or soak EXTREN® shapes in these solvents**.

3) Properly cure the adhesive joint.

   Freshly bonded joints should be held in position with clamps or weights until the adhesive cures. Joints bonded with epoxy adhesives generally can be handled with reasonable care after 8 hours of curing. It is desirable to leave the clamps or bonding pressure on the joints overnight for a total of 20 to 24 hours. If an oven is available, the curing time can be lessened considerably by heating moderately. The joint should not be expected to carry its design load until the adhesive joints have cured a minimum of 48 hours at 70°F. Lower temperatures require longer cure times.

   On the following page is a procedure for making structural epoxy joints. It provides additional information on surface preparation, mixing of epoxy and application.

CONNECTIONS

PROCEDURE FOR MAKING STRUCTURAL EPOXY JOINTS

Materials Used

Strongwell epoxy adhesive base
Strongwell epoxy adhesive hardener
Small wax coated paper cup for mixing
Clean wooden or FRP stick for mixing
80 grit sandpaper
Clamps for holding epoxy joints during cure
Clean cloth

Surface Preparation

1) Sand mating surfaces with 80 grit sandpaper until the surface gloss has been removed. The surfacing veil must be ground off to expose the glass reinforcement. Sand blasting equipment can also be used.
2) Remove all dust with a clean cloth; air blasting equipment may also be used. Avoid recontamination of the surface from handling.

Mixing of Epoxy

Mix equal volume portions of the base and hardener in a small wax coated paper cup with a clean stick until a uniform gray color is attained and all marbled appearance is gone.

> **NOTE:** Other adhesive systems compatible with fiberglass can be utilized and the manufacturer's mixing instructions for these systems should be followed.

Application and Cure

1) Apply the mixed epoxy uniformly to all surfaces to be joined. A thin application is often more beneficial than a thick application.
2) Avoid introducing moisture into the joint.
3) Join the surfaces to be bonded. The pot life at 77°F for a 3 oz. mixture of equal volumes of base and hardener is 2.5 hours.
4) Secure the joint with clamps (or rivets or bolts) and allow 24 hours for a full cure. The assembly can often be handled with reasonable care in less than 8 hours. The structure should not be required to support its design load until at least 48 hours (at 70°F) after bonding. Lower temperatures require a longer cure.
5) After securing the joint, wipe away excess epoxy.

BEAM SHEAR CONNECTIONS

DETAIL FOR W4, W6, C4, C6, I 4 or I 6

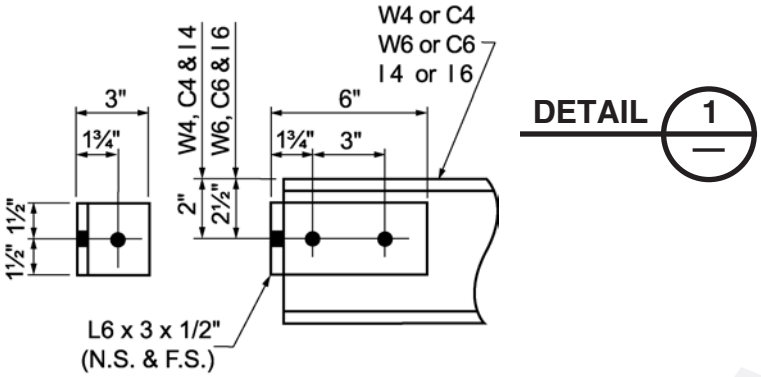

BOLTED AND EPOXIED CAPACITY (SEE NOTE #1) - 3375#
BOLTED ONLY CAPACITY (SEE NOTE #2)

3/8" Bolt & 1/4" Web = 1400#	3/8" Bolt & 3/8" Web = 2110#
1/2" Bolt & 1/4" Web = 1875#	1/2" Bolt & 3/8" Web = 2810#
5/8" Bolt & 1/4" Web = 2340#	5/8" Bolt & 3/8" Web = 3375#

DETAIL FOR W8, W10, C8, C10, I 8 or I 10

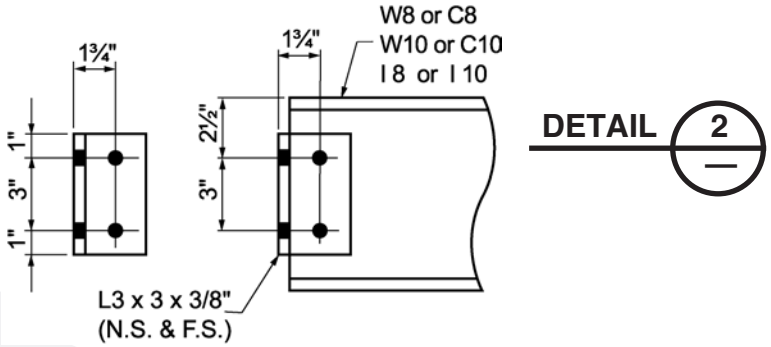

BOLTED AND EPOXIED CAPACITY (SEE NOTE #1) - 4200#
BOLTED ONLY CAPACITY (SEE NOTE #2)

3/8" Bolt & 3/8" Web = 2110#	3/8" Bolt & 1/2" Web = 2810#
1/2" Bolt & 3/8" Web = 2810#	1/2" Bolt & 1/2" Web = 3750#
5/8" Bolt & 3/8" Web = 3515#	5/8" Bolt & 1/2" Web = 4200#

DETAIL FOR W8, W10, C8, C10, I 8 or I 10

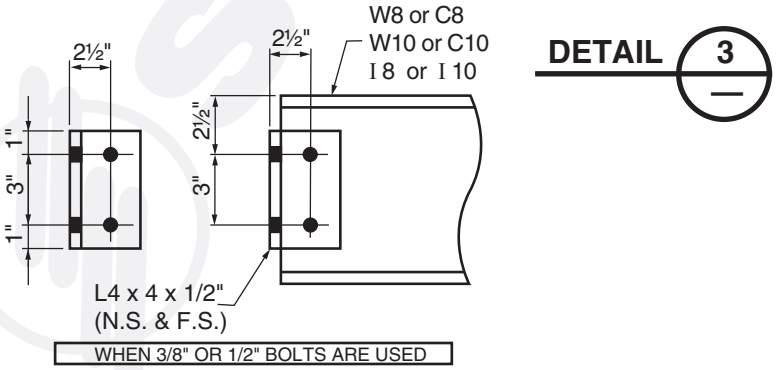

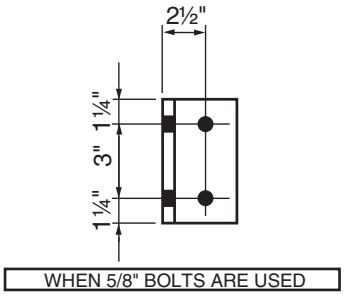

BOLTED AND EPOXIED CAPACITY (SEE NOTE #1) - 5600#
BOLTED ONLY CAPACITY (SEE NOTE #2)

3/8" Bolt & 3/8" Web = 2110#	3/8" Bolt & 1/2" Web = 2810#
1/2" Bolt & 3/8" Web = 2810#	1/2" Bolt & 1/2" Web = 3750#
5/8" Bolt & 3/8" Web = 3515#	5/8" Bolt & 1/2" Web = 4680#

STRONGWELL

BEAM SHEAR CONNECTIONS

DETAIL FOR W10, W12, C10, C12, I 10 or I 12

DETAIL 4

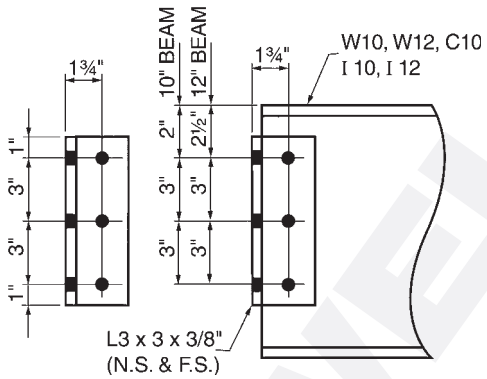

BOLTED AND EPOXIED CAPACITY (SEE NOTE #1) - 6700#
BOLTED ONLY CAPACITY (SEE NOTE #2)

3/8" Bolt & 3/8" Web = 3160#	3/8" Bolt & 1/2" Web = 4220#
1/2" Bolt & 3/8" Web = 4220#	1/2" Bolt & 1/2" Web = 5620#
5/8" Bolt & 3/8" Web = 5270#	5/8" Bolt & 1/2" Web = 6700#

DETAIL FOR W10, W12, C10, C12, I 10 or I 12

DETAIL 5

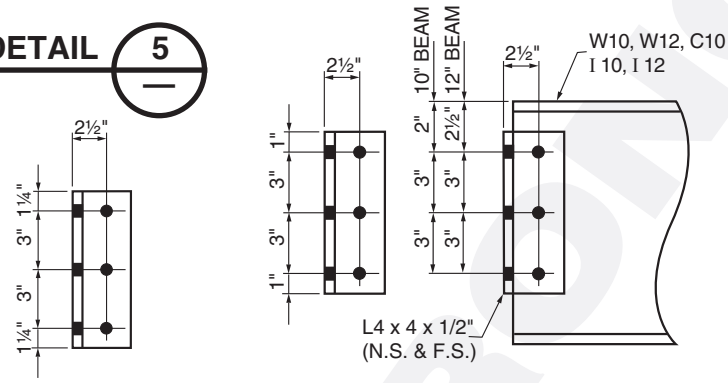

WHEN 5/8" BOLTS ARE USED | WHEN 3/8" OR 1/2" BOLTS ARE USED

BOLTED AND EPOXIED CAPACITY (SEE NOTE #1) - 9000#
BOLTED ONLY CAPACITY (SEE NOTE #2)

3/8" Bolt & 3/8" Web = 3160#	3/8" Bolt & 1/2" Web = 4220#
1/2" Bolt & 3/8" Web = 4220#	1/2" Bolt & 1/2" Web = 5620#
5/8" Bolt & 3/8" Web = 5270#	5/8" Bolt & 1/2" Web =7030#

DETAIL FOR W12 or I 12

DETAIL 6

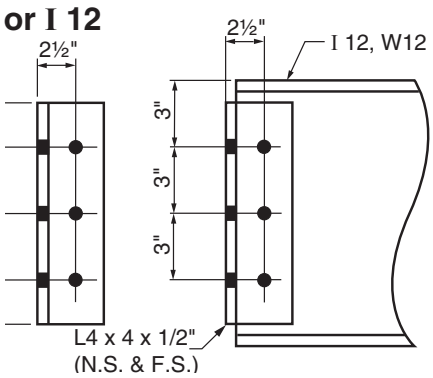

BOLTED AND EPOXIED CAPACITY (SEE NOTE #1) - 11250#
BOLTED ONLY CAPACITY (SEE NOTE #2)

3/8" Bolt & 1/2" Web = 4220#
1/2" Bolt & 1/2" Web = 5620#
5/8" Bolt & 1/2" Web = 7030#

NOTES:

1. Capacities shown controlled by shear thru heel of angle (F_V=4500 psi / 4 = 1125 psi)
2. Capacities shown controlled by bearing around fastener or shear of stainless steel fasteners.
3. The beam capacity must be verified as being adequate.
4. Epoxy and joint preparation in accordance with Section 19 — **FABRICATION** in the Strongwell *Design Manual*.
5. Details 1, 2 and 4 are standard Strongwell fabrication connections. Details 3, 5 and 6 are alternate fabrication connections.
6. Recommended hole diameters: Fastener +1/16".
7. 1/4" stainless steel angles can be substituted for the **EXTREN**® angles shown in the details.
8. The effect on strength of notches, copes or other stress concentrations must be considered.

STRONGWELL

COLUMN BASE PLATES

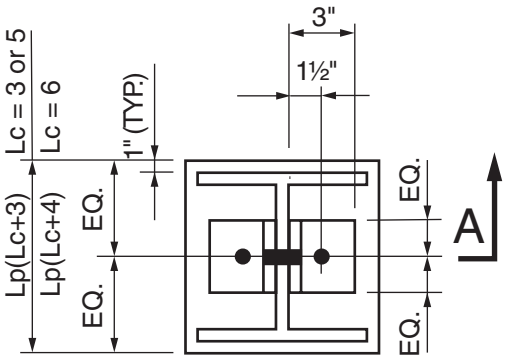

DETAIL 1 (PLAN)

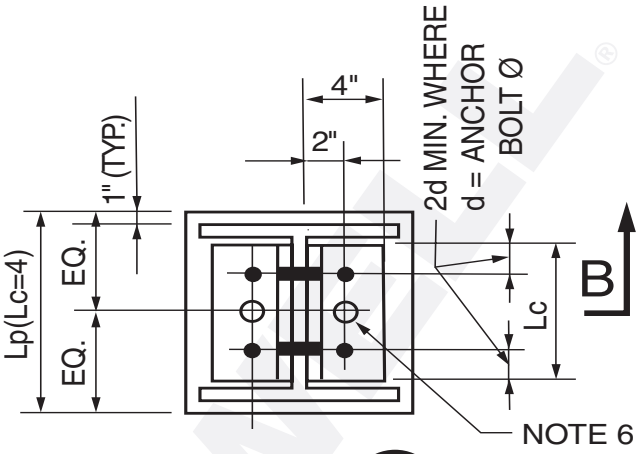

DETAIL 2 (PLAN)

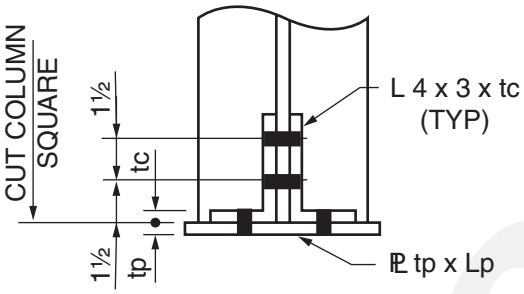

SECTION A

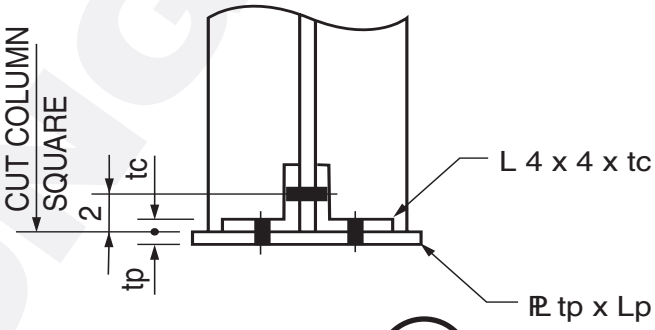

SECTION B

CAPACITIES -LBS				
CLIP		PLATE - tp		
Lc	tc	3/8	1/2	3/4
3	3/8	1325*	1850*	2550
	1/2	1800*	2350*	3375
5	3/8	2100*	2900*	4225
	1/2	2850*	3725*	5625
6	3/8	2550*	3500*	5075
	1/2	3450*	4525*	6750

* BENDING CONTROLS

CAPACITIES -LBS				
CLIP		PLATE - tp		
Lc	tc	1/2	3/4	1
6	1/2	2825	4500	6650
	3/4	4400	6650	8750
8	1/2	3675	5800	8525
	3/4	5750	8275	11,350
10	1/2	4525	7125	10,425
	3/4	7075	10,175	13,900

* BENDING CONTROLS

TYPICAL CALLOUT
ON DESIGN DWG.

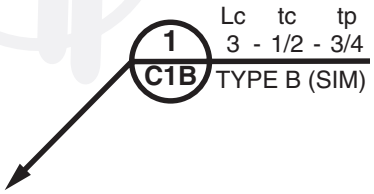

TYPICAL CALLOUT
ON DESIGN DWG.

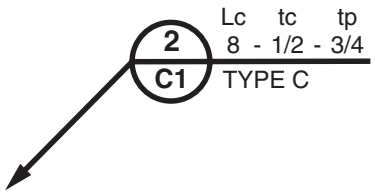

COLUMN BASE PLATES

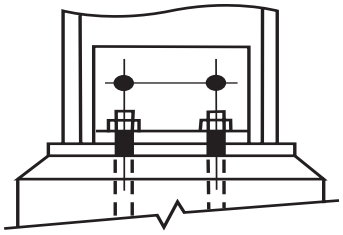

TYPE A
TYPICAL BOLTING

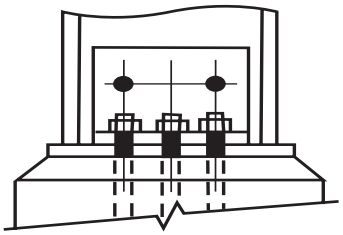

TYPE B
COLUMN ON GROUT
W/ CENTER ANCHOR BOLTS

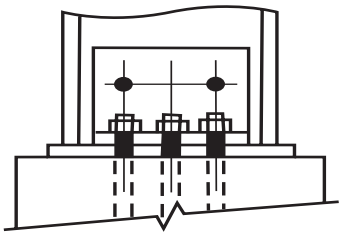

TYPE C
COLUMN ON FLAT
W/ CENTER ANCHOR BOLTS

NOTES:

(DEVELOPED WITH TENSION LOADS)

1. Values shown here are based on epoxy and bolted connections. For bolted only connections see Bearing and Shear values shown later in this section.
2. Capacities shown were controlled by shear through heel of angle (F_v=1125 psi) or bending of plate and angle with F_B=10000 psi/4=2500 psi.
3. For columns with combined tension and shear, both of which put shear into the heel of the angle, the total of the tension load + shear load must be less than the capacity listed.
4. Plates shown square Lp required for capacity, but width can vary (i.e. for I-beam columns.)
5. Detail 2 can utilize anchor bolts separate from base plate assembly bolts. Two required, 1/2" dia. minimum.
6. Epoxy and joint preparation in accordance with Section 19 — **FABRICATION**.
7. 1/4" stainless steel angles can be substituted for the **EXTREN®** angles shown in the details.

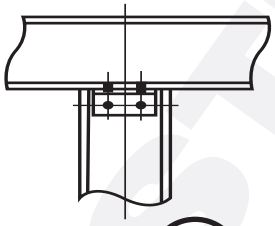

DETAIL 3

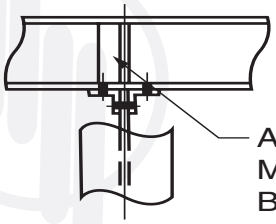

ANGLE (N.S. & F.S.)
MAY BE REQUIRED TO PREVENT
BEAM WEB BUCKLING
- REF. DESIGN GUIDE - BEAMS

DETAIL 4

STRONGWELL

SINGLE/DOUBLE ANGLE & TEE BRACING DETAILS

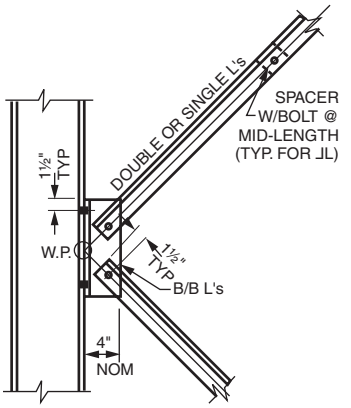

DETAIL 1

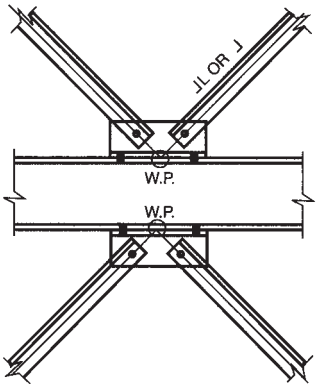

DETAIL 4

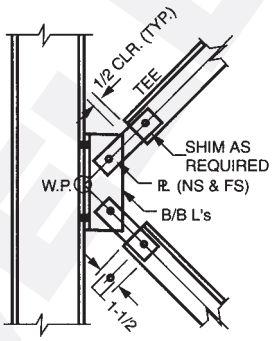

DETAIL 7

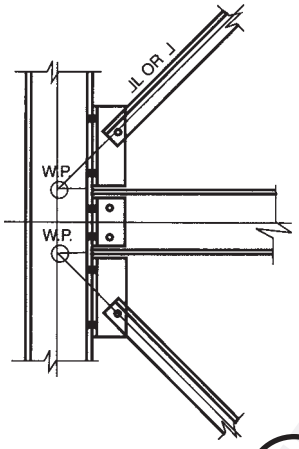

DETAIL 2

SEE ALTERNATE DETAIL 13

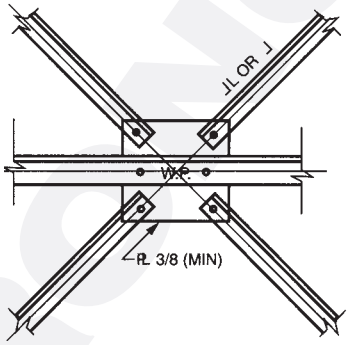

DETAIL 5

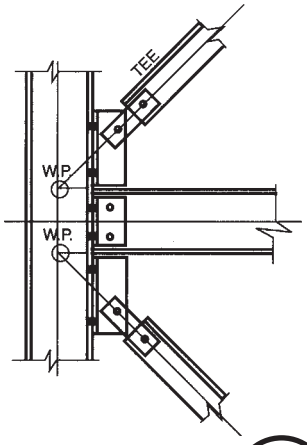

DETAIL 8

SEE ALTERNATE DETAIL 14

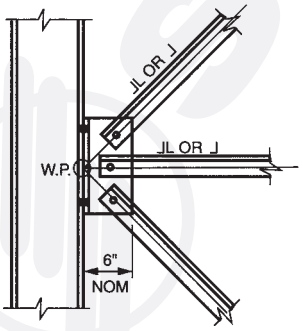

DETAIL 3

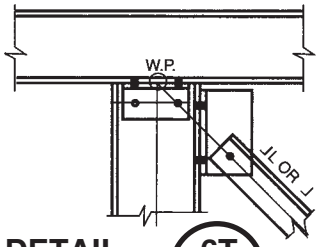

DETAIL 6T

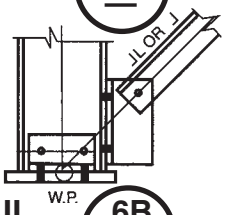

DETAIL 6B

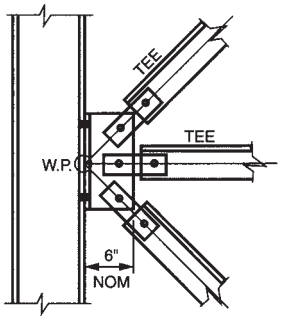

DETAIL 9

SINGLE/DOUBLE ANGLE & TEE BRACING DETAILS

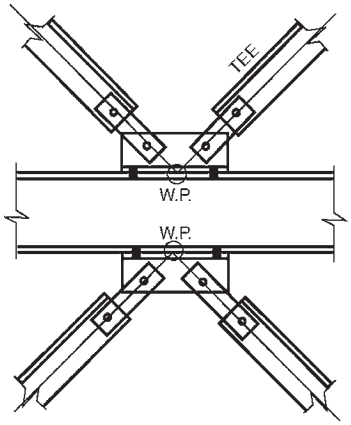

DETAIL 10

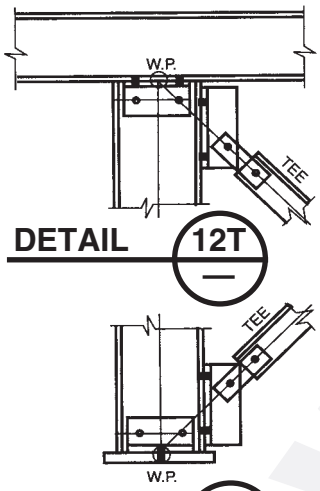

DETAIL 12T

DETAIL 12B

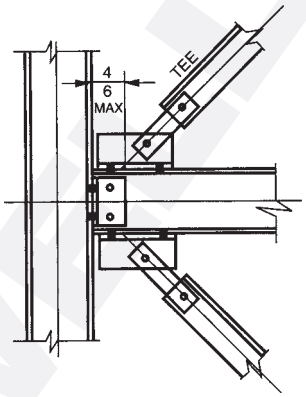

DETAIL 14

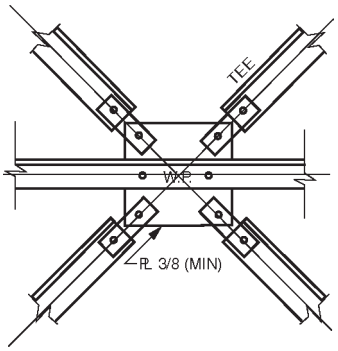

DETAIL 11

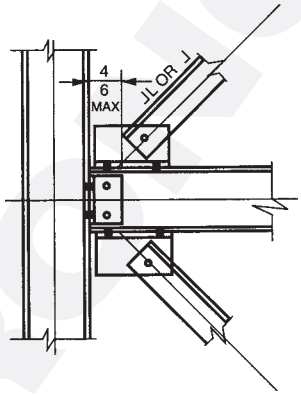

DETAIL 13

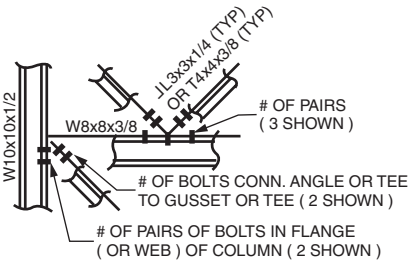

BOLT CALLOUT FOR ANGLES & TEES

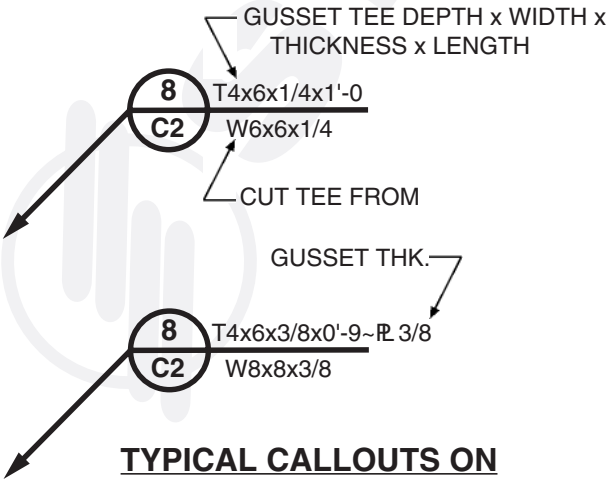

TYPICAL CALLOUTS ON DESIGN DRAWINGS

NOTES:

1. These connections are to be used with epoxy. 3/8" dia. bolts only provide clamp until epoxy cures. Ultimate capacity of joint = 1000 psi. For bolted only connections see Bearing and Shear values later in this section.
2. Designer is cautioned to check required area for epoxy with F_{ALL} = 1000/4 = 250 psi and tee thickness with Fv = 4500/4 =1125 psi.
3. Gussets should be symmetrical about WP whenever possible.
4. Epoxy and joint preparation in accordance with Section 19 — **FABRICATION**.

STRONGWELL

HORIZONTAL BRACING — TEE & ANGLE DETAILS

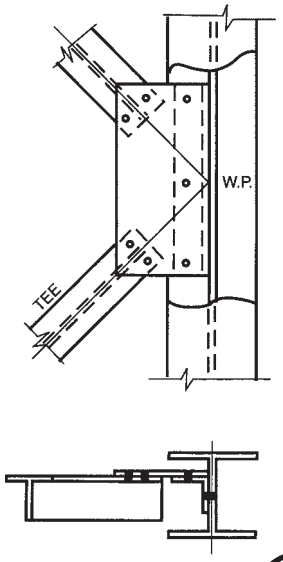

DETAIL 1

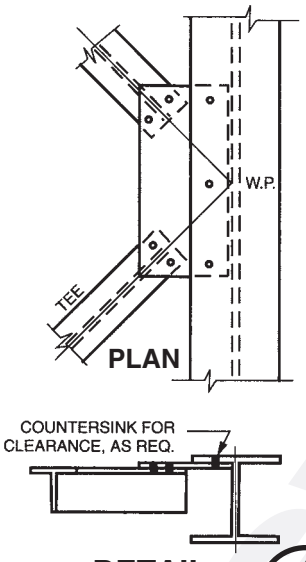

DETAIL 4

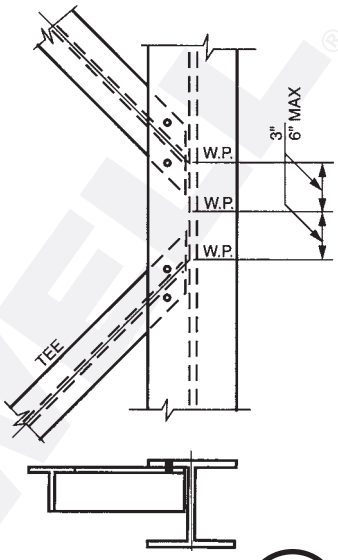

DETAIL 7

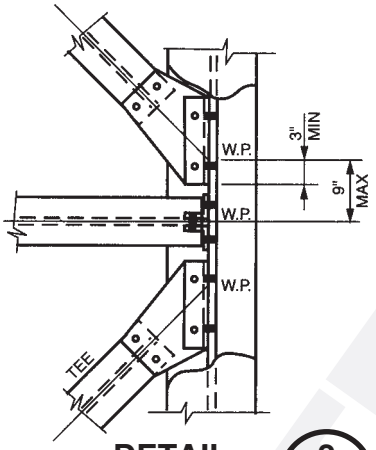

DETAIL 2

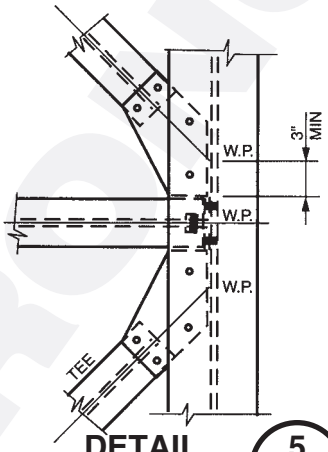

DETAIL 5

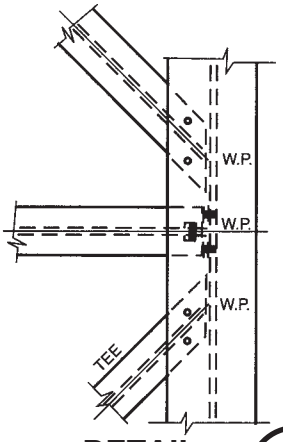

DETAIL 8

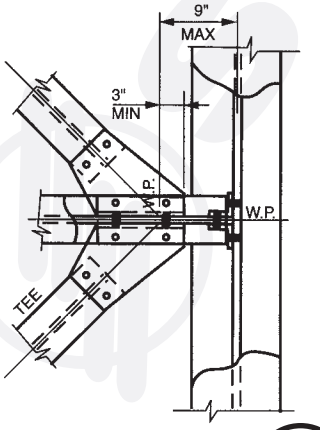

DETAIL 3

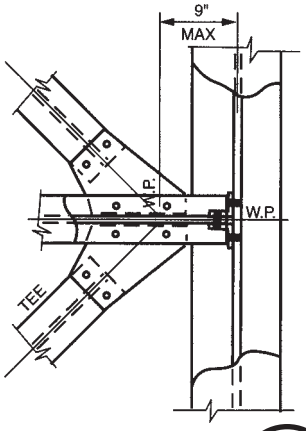

DETAIL 6

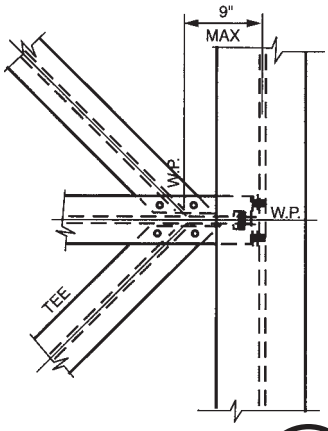

DETAIL 9

HORIZONTAL BRACING — TEE & ANGLE DETAILS

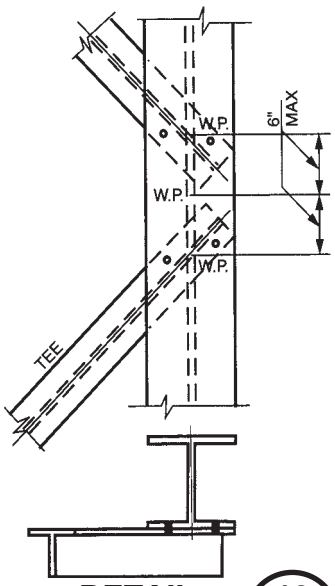

DETAIL 10 —

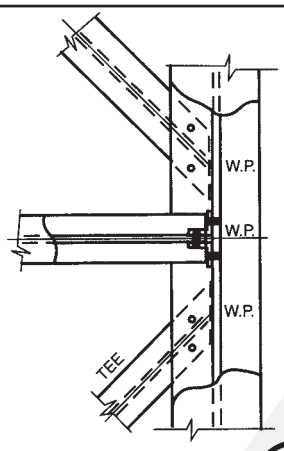

DETAIL 11 —

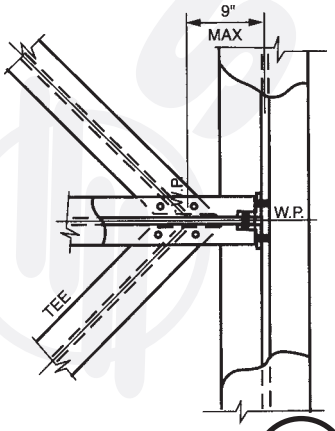

DETAIL 12 —

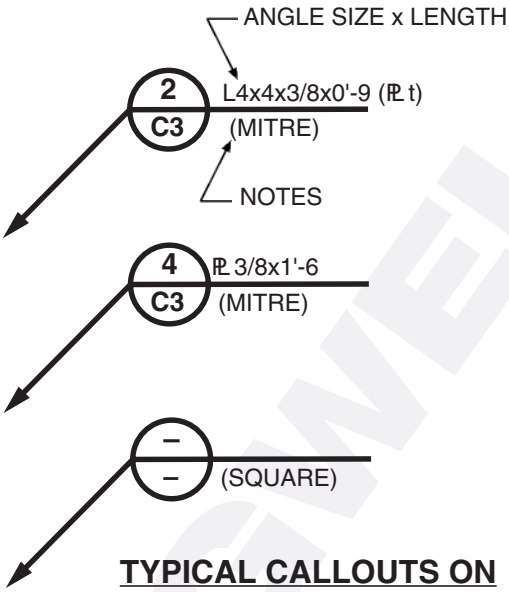

TYPICAL CALLOUTS ON DESIGN DRAWINGS

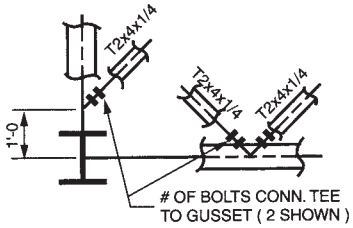

BOLT CALLOUT ON DESIGN DRAWINGS

NOTES:

1. These connections are to be used with epoxy. 3/8" dia. bolts only provide clamp until epoxy cures. Ultimate capacity of joint = 1000 psi. For bolted only connections see Bearing and Shear values later in this section.
2. Designer is cautioned to check required area for epoxy with F_{ALL} = 1000/4 = 250 psi and gusset/tee thickness with Fv = 4500/4 =1125 psi.
3. Gussets should be symmetrical about WP whenever possible.
4. Epoxy and joint preparation in accordance with Section 19 — **FABRICATION**.

THREADED FASTENERS

BEARING

ALLOWABLE LOADS IN POUNDS

FIBERGLASS THICKNESS	BOLT DIAMETER 1/4"	3/8"	1/2"	5/8"	3/4"	1"
1/8"	234	352	469	586	703	938
1/4"	469	703	938	1172	1406	1875
3/8"	703	1055	1406	1758	2109	2812
1/2"	938	1406	1875	2344	2812	3750
3/4"	1406	2109	2812	3516	4219	5625

Allowable load = Allowable bearing stress x bearing area.

EXAMPLE

1/4" thickness with 1/2" dia. bolt

$$\text{Allowable load} = \frac{30{,}000 \text{ psi}}{4} \times .25" \times .50" = 938 \text{ lbs.}$$

NOTE: The above table assumes the bearing stress on fiberglass controls. The designer should verify that no other element of the connection controls.

SHEAR

ALLOWABLE LOADS IN POUNDS

BOLT TYPE	BOLT DIAMETER 1/4"	3/8"	1/2"	5/8"	3/4"	1"
S.S. Single Shear	1473	3312	5889	9204	13254	23562
S.S. Double Shear	2964	6624	11778	18408	26508	47124
FIBREBOLT®, Single Shear	—	400	650	950	1550	3750
FIBREBOLT®, Double Shear	—	750	1250	1875	3000	5000

NOTE: The above table assumes the shear capacity of the fastener controls. The designer should verify that no other element of the connection controls.

RECOMMENDED MINIMUM FASTENER EDGE DISTANCES AND PITCH RATIO OF DISTANCE TO FASTENER DIAMETER

	RANGE	COMMON
Edge Distance - end	2.0 to 4.5	3.0
Edge Distance - side	1.5 to 3.5	2.0
Pitch	4.0 to 5.0	5.0